OBSOLETE

Differential Pressure Transmitter, Stainless Steel, Pressure Rating PN 2.5/25/40 bar Standard Model 891.34.1998, Ex-Version Model 892.34.1998

GL

Applications

- For corrosive gaseous and liquid media, provided they are not highly viscous or crystallising, and also for corrosive environments
- Monitoring and control of pumps
- Filter monitoring
- Level measurement in closed tanks

Special Features

- Pressure ranges from 0 ... 6 mbar to 0 … 25 bar
- High working pressure (static pressure) up to 40 bar
- High overpressure safety up to 40 bar
- Industrial standard signals 4 ... 20 mA or 0 ... 20 mA
- Approval: German Lloyd, No. 99180-96HH

Differential Pressure Transmitter Model 891.34.1998

General features

The principle features of these differential pressure transmitter are their highly corrosion-resistant stainless steel design and their all welded sealing of the pressure chamber providing for an increased tightness in the long term (no elastomer sealing rings).

The differential pressure transmitter consists mainly of a mechanical measuring system of model 732.51 with elastic pressure element, magnetic-field-dependent sensor (Hall sensor) with amplifier and case with the connecting parts for the electronics. A permanent magnet rigidly coupled to the pressure element influences the flow field of a sensor. The resulting differential voltage is amplified to a standard current signal.

Standard output signals of 4 ... 20 mA (2 wire system) or 0 ... 20 mA (3 wire system) can be provided from a non-stabilized DC supply of 10 ... 30 V.

Upon request, the transmitters may also be supplied in intrinsically safe Ex-approved design with the output signal 4 ... 20 mA.

For recalibration, zero and span can be adjusted by means of easily accessible potentiometers.

The use of high-quality stainless steel material is intended for applications within the chemical industry for gaseous, liquid and aggressive media. Typical applications are, for example, the monitoring of pumps, filters and compressors.

As an optional extra, the design of the pressure transmitter can also be modified to allow for a higher max. total overpressure and higher overload values.

Electrical connection is made by means of a cable box with screwed cable gland M20 x 1.5.

Supplemenatry data sheets:
Differential Pressure Transmitter DELTA-trans; Model 891.34.2189; see data sheet PM 07.18

WIKA
Part of your business

OBSOLETE

Technical data		Model 891.34.1998 and Model 892.34.1998 (Ex-version)
Power supply U_B		
■ for non-Ex-class Models	DC V	$10 < U_B \leq 30$
■ for Ex-class Models		see under section Ex-class protection!
Supply voltage effect	% of span/10 V	≤ 0.1
Permissible residual ripple	% ss	≤ 10
Output signal and		for non-Ex-class protection, models 891.34.1998:
permissible max. load R_A		4 … 20 mA, 2-wire system $R_A \leq (UB - 10\ V) / 0.02\ A$ with R_A in Ohm and U_B in Volt
		0 … 20 mA, 3-wire system $R_A \leq (UB - 10\ V) / 0.02\ A$ with R_A in Ohm and U_B in Volt
		{0 ... 10 V, 3-wire system $R_A \leq (UB - 10\ V) / 0.02\ A$ with R_A in Ohm and U_B in Volt}
		for Ex-class version, models 892.34.1998:
		4 … 20 mA, 2-wire system $R_A \leq (U_B - 12.5\ V) / 0.02\ A$ with R_A in Ohm and U_B in Volt
Effect of load	% of span	≤ 0.1
Response time	ss	approx. 1 (optional approx. 0.05)
Output signal adjustment		
■ Zero point, electrical	% of span	± 15
■ Span, electrical	% of span	± 30
Linearity	% of span	± 1.2 {0.8} (limit point calibration)
Hysteresis	% of span	≤ 0.8 {0.5}
Permissible		
■ Medium temperature [1)]	°C	-25 … +100 {+130}
■ Ambient temperature [1)]	°C	-20 … +60
Compensated temperat. range	°C	-25 … +60
Temperature coefficient in		
compensated temperat. range		
■ average T_C on zero point	%of span/10 K	≤ 0.3
■ average T_C on span	%of span/10 K	≤ 0.3
Ex-class protection		according EG-Type Examination Certificate DMT 01 ATEX E 021 for model 892.34
Output signal		4 … 20 mA, 2-wire system
Ex certification		Ex II 2G EEx ia IIC T6 and I M2 EEx ia I
Conformity specifications		
■ Power supply	DC V	12.5 … 28
■ Short circuit rating	mA	100
■ Rating	mW	1000
■ Internal capacitance	nF	$C_i \leq 24$
■ Internal inductance	mH	$L_i \leq 0.2$
■ Medium temperature	°C	-20 … +60
■ Ambient temperature	°C	-20 … +60
CE-Conformity		Interference emission and immunity per EN 61 326
Wiring		Terminal box (screw terminals up to 2.5 mm²)
Wiring protection		Protected against reserve polarity and overvoltage
Ingress protection		
per EN 60 529 / IEC 529		IP 65
Weight		
■ non-Ex-class Models	kg	approx. 3.8 (gauge head Ø 140 mm) or approx. 1.9 (gauge head Ø 78 mm), respectively
■ Ex-class Models	kg	approx. 4.0 (gauge head Ø 140 mm) or approx. 2.2 (gauge head Ø 78 mm), respectively
Dimensions	mm	see drawings

1) for maximum values of Ex-class versions: see Ex-class protection
{ } Items in curved brackets are optional extras for additional price.

OBSOLETE

Further technical dates

Gauge head diameter	Pressure ranges	working pressure (static pressure) maximum in bar		Overpressure safe (either side) maximum in bar	
		Standard	Option	Standard	Option
140 mm	0 ... 6 mbar to 0 ... 60 mbar	2.5 bar	6 bar [1]	2.5 bar	-
78 mm	0 ... 0.1 bar to 0 ... 0.25 bar	25 bar	40 bar	2.5 bar	40 bar
	0 ... 0.4 bar	25 bar	40 bar	4 bar	40 bar
	0 ... 0.6 bar	25 bar	40 bar	6 bar	40 bar
	0 ... 1.0 bar	25 bar	40 bar	10 bar	40 bar
	0 ... 1.6 bar	25 bar	40 bar	16 bar	40 bar
	0 ... 2.5 bar to 0 ... 25 bar	25 bar	40 bar	25 bar	40 bar

1) Linearity ± 2.0 % of span (limit point calibration)

Power supply devices for Differential Pressure Transmitter, Model 891.34.1998 under non-Ex-operation

For non-Ex-operation the following power supply devices are available for DC-supply of transmitter model 891.34.1998:

- Model A-VA-1 (old model 903.30.400) - Power supply, line voltage AC 230 V, output voltage DC 24 V, 70 mA max.
- Model KFA6-STR-1.24.500 - Power supply, line voltage AC 90 ... 253 V, 48 ... 63 Hz, output voltage DC 24 V, 500 mA max.

Ex-Line transformer for Differential Pressure Transmitter, Model 892.34.1998 under Ex-operation

For Ex-operation the following Ex-line transformers are available for galvanical separation and transfer of power supply for transmitter model 892.34.1998:

- Model KFD2-STC4-Ex1, Ex-line transformer, line voltage: DC 20 ... 32 V, output voltage: DC 25.4 V max., 88.2 mA max.
- Model SI 815-52, Ex-line transformer with power supply transfer for 2-wire system 4 ... 20 mA. The line transformer is usable with power supply or electronic indicating instrument with integrated power supply for transmitter. When calculating the permissible max. load R_A a voltage drop of 7.7 V at the line transformer has to be considered.

Dimensions in mm

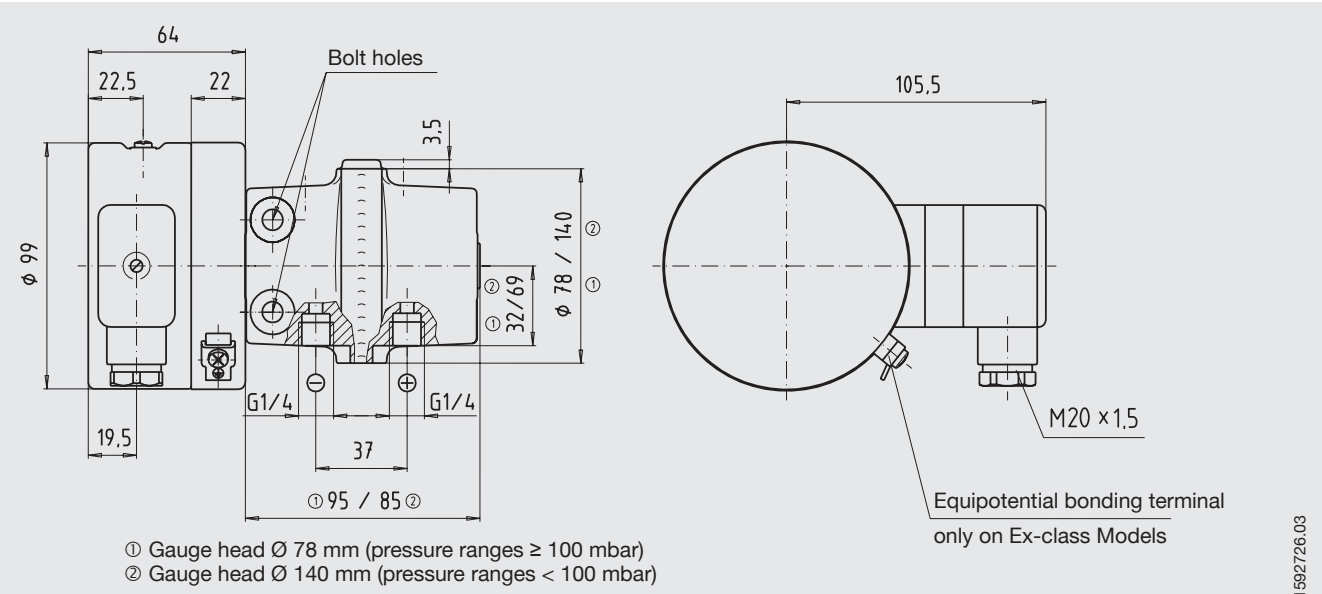

① Gauge head Ø 78 mm (pressure ranges ≥ 100 mbar)
② Gauge head Ø 140 mm (pressure ranges < 100 mbar)

OBSOLETE

Position of the potentiometers in the electronics case

The potentiometers are accessible after unscrewing the screw plugs in the top of the casing.

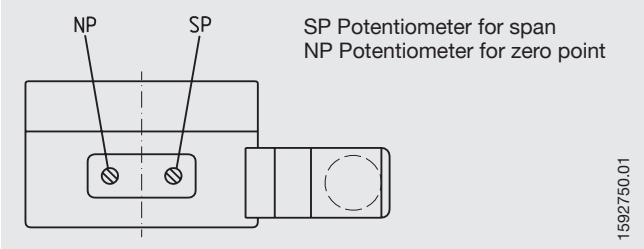

Connection details

The terminals 1 and 5 are bridged internally in the terminal box providing two terminals for the 0 V/S- connection.

4 … 20 mA 2-wire system

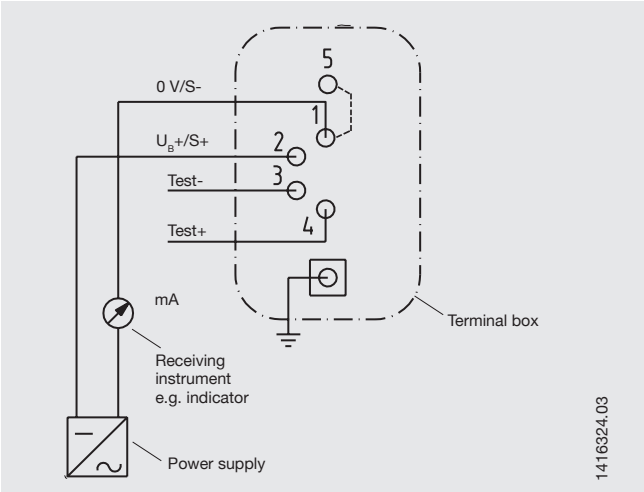

0 … 20 mA 3-wire system

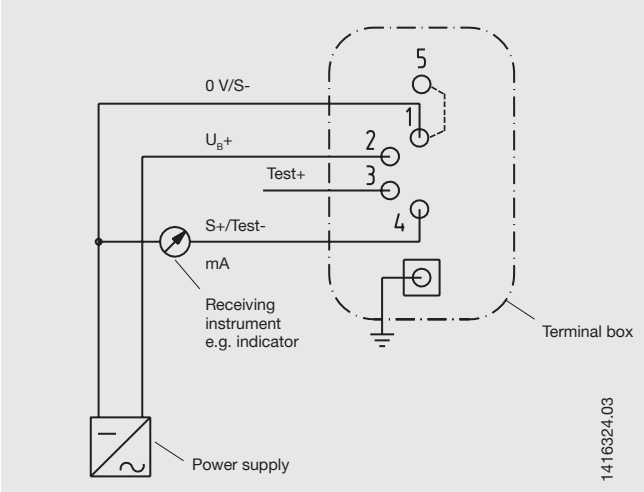

OBSOLETE

Surface or pipe mounting bracket (option)

Dimensions in mm

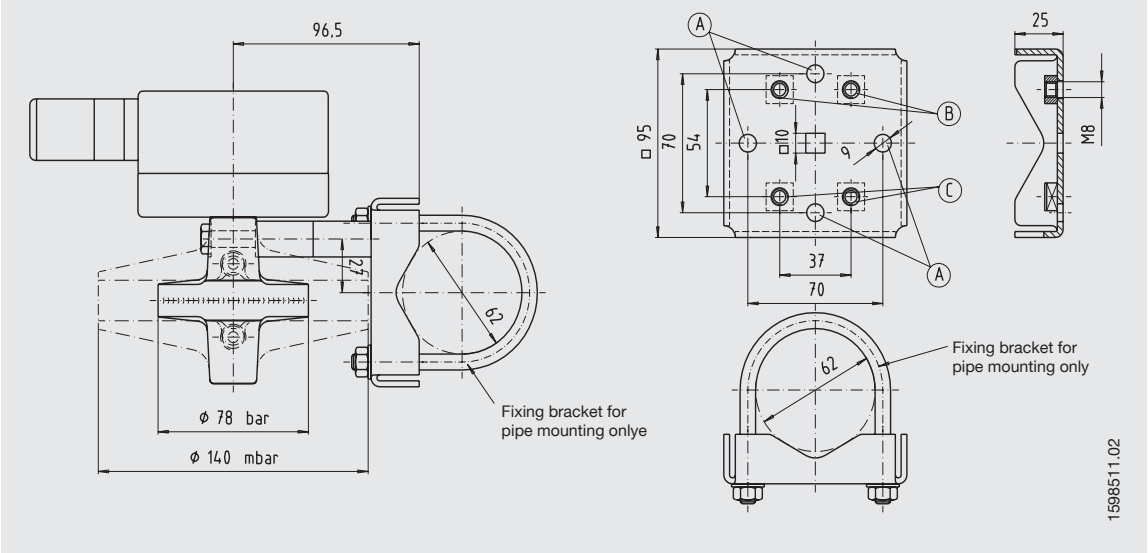

For wall mounting

1. Screw the console to the wall using the fastening bores (A) by means of 2-4 screws (depending on the respective mounting situation). The fastening material is not part of the scope of delivery.

2. Screw the pressure gauge to the fastening thread (B) or (C) of the con sole by means of the screws and distance bushes enclosed.

Approval German Lloyd

GL

Additional or deviating technical data

Pressure ranges		smallest measuring range 0 ... 10 mbar		
Output signal		4 ... 20 mA, 2-wire, current limit I < 32 mA		
Permissible				
ambient temperature	°C	-25 ... +70		
ESD	kV	+/- 8	contact discharge	IEC 1000-4-2
Electromagnetic fields	V/m	10	80% AM, 1 kHz, 0.01 ... 1000 MHz	IEC 1000-4-3
Burst	kV	+/- 2	coupling clamp	IEC 1000-4-4
Conducted HF-disturbance	V	3	80% AM, 1 kHz, 0.01 ... 100 MHz	IEC 1000-4-6
Surge	kV	+/- 0.5	symetrically	IEC 1000-4-5
	kV	+/- 1	asymetrically, R_i = 42 Ohm	
	kV	+/- 1	symetrically	
	kV	+/- 2	asymetrically, R_i = 42 Ohm, with surge protection only e.g. model MM-DS/x-NFE(L), firm Dehn & Söhne or equivalent	
Conducted NF-disturbance	V_{eff}	3	0.05 ... 10 kHz	IEC 945
Vibration test Fc				
■ 2 ... 13.2 Hz, +/- 1 mm	%	<1.5	error	IEC 68-2-6
■ 13.2 ... 100 Hz, 0.7 g	%	<1.5	error	

OBSOLETE

Ordering information

Model / Pressure range / Working pressure max. (static pressure rating) ... bar / Connecting size and connection location / Output signal / Options

Modifications may take place and materials specified may be replaced by others without prior notice.
Specifications and dimensions given in this leaflet represent the state of engineering at the time of printing.

WIKA Alexander Wiegand GmbH & Co. KG
Alexander-Wiegand-Straße 30
63911 Klingenberg/Germany
Tel. (+49) 9372/132-0
Fax (+49) 9372/132-406
E-mail info@wika.de
www.wika.de

9055827 04/2008 GB